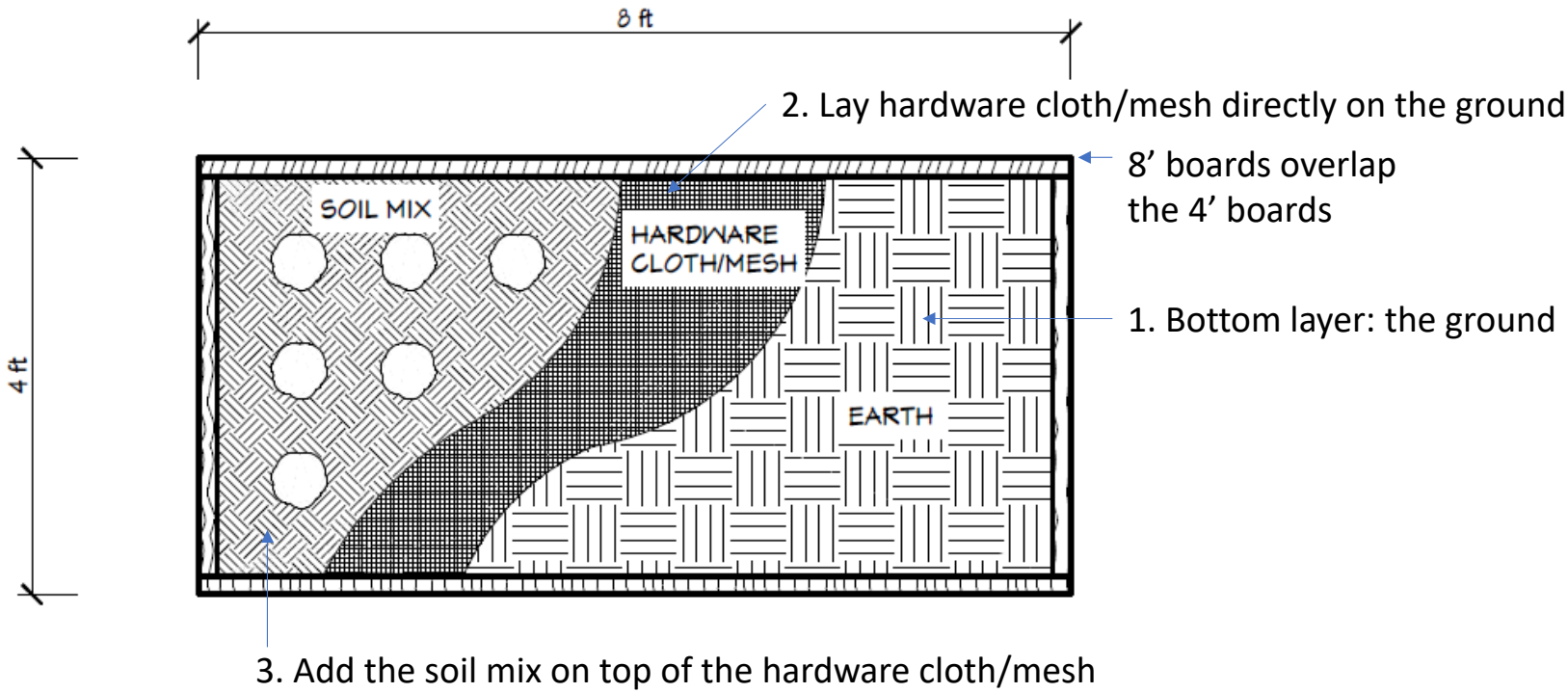
8 ft
4 ft
SOIL MIX
HARDWARE CLOTH/MESH
EARTH
2. Lay hardware cloth/mesh directly on the ground
8' boards overlap the 4' boards
1. Bottom layer: the ground
3. Add the soil mix on top of the hardware cloth/mesh

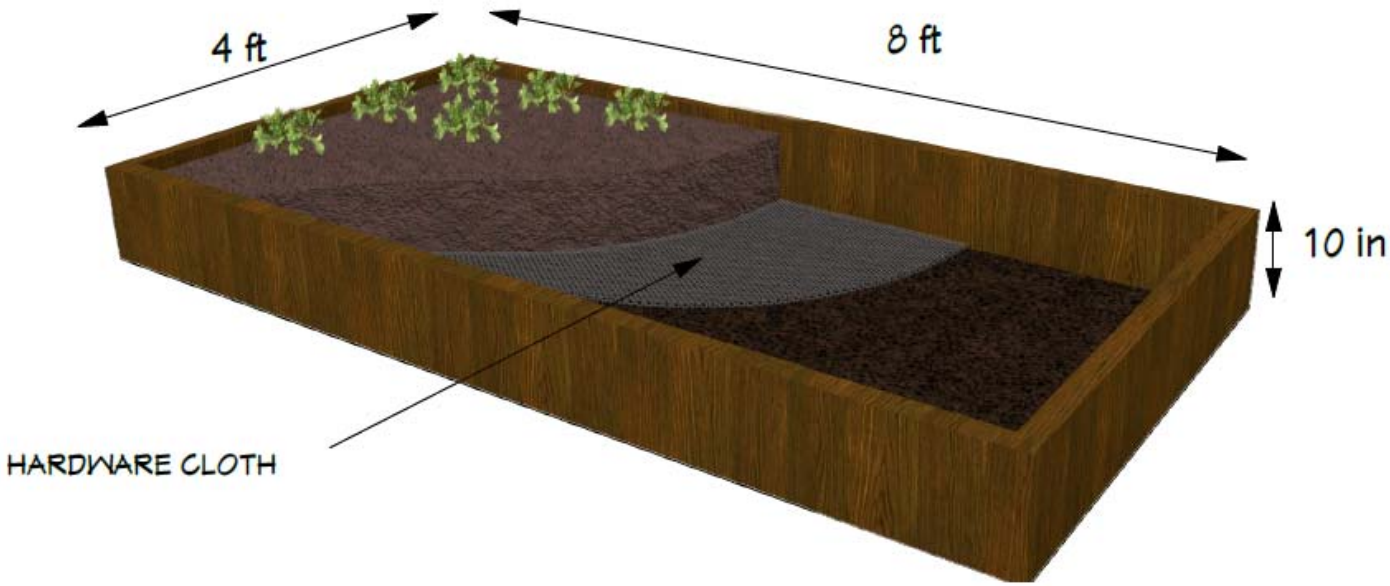
4 ft
8 ft
10 in
HARDWARE CLOTH
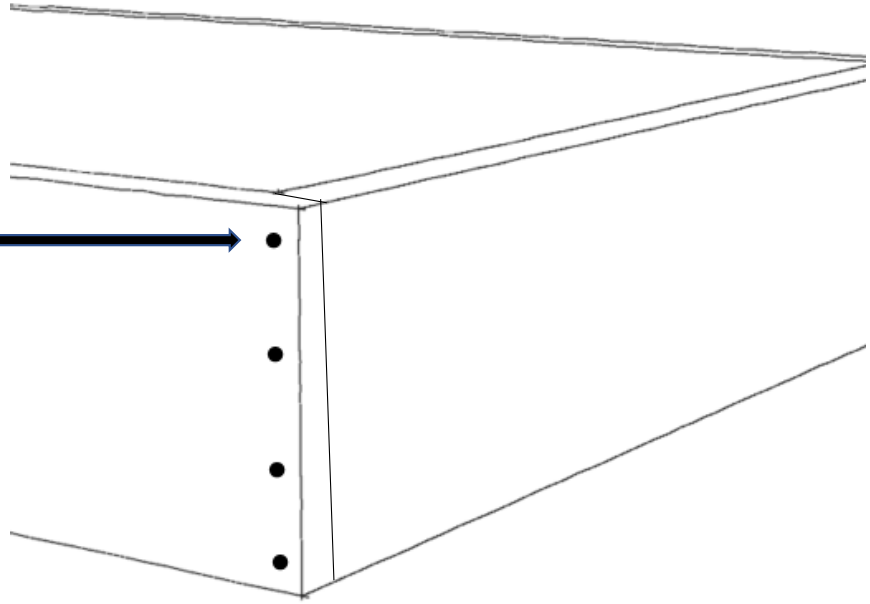
USE (4) 3 ½” SCREWS TO DRILL THROUGH AND CONNECT THE BOARDS